GOTRAX

Xr Elite

ELECTRIC SCOOTER

USER MANUAL

Congratulations on your purchase!

This user manual will help you assemble and operate your new Electric Scooter. Be sure to read **ALL OF THE INFORMATION** in this manual before riding.

NOTE TO ALL RIDERS UNDER 18 YEARS OF AGE: It's very important that you get parental permission before riding your electric scooter.

Don’t ride until you read this

ALWAYS wear a helmet when riding your Electric Scooter.

Make sure your scooter has a **full battery** before taking it out to ride.

Always be aware of local road laws, and follow them.

Do not ride the scooter under the influence of drugs or alcohol.

Always respect pedestrians.

Do not ride under wet conditions. The scooter may slide from under your feet causing injury. Wet conditions may damage the electronics and void the warranty.

Warning Message

1. **Avoid water** - The scooter is not waterproof. The electronics may be damaged due to water and water damage is not covered by our warranty. Riding in wet conditions is also very dangerous and may result in injury.

2. **Abuse** - We do not cover physical damage due to negligent care and extreme riding.

3. **Whenever you ride the GOTRAX electric scooter**, you risk severe injury or even death from loss of control, collisions, and falls. Use caution and ride at your own risk.

4. **Do not** modify the product from the manufacturer's original design.

5. **Keep** hands and all body parts away from moving parts while operating the scooter.

6. **Before riding** - be sure to check the scooter over and make sure the scooter is operating correctly before each use.

7. **Before riding** - be sure to check that the braking system is functioning properly; also be sure to check that all safety labels are in place and you understand the safety warnings.

8. **Before riding** - be sure that any and all axle guards, chain guards, or other covers or guards supplied by the manufacturer are in place and in serviceable condition.

9. **Before riding** - be sure to check that the tires are in good condition, inflated properly, and have sufficient tread remaining.

10. **Never** exceed the 220 lb (100 kg) maximum load rating.

11. The electric scooter should **never** be used by children under the age o

12. **Maximum Speed** - Your electric scooter goes the maximum speed of 15.5 mph.

Unpack

You should find each of these items in your box:

1. Electric Scooter
2. Console & Handlebars
3. Approved Power Adapter / Charging Unit
4. 4mm Allen Wrench
5. Tire Gauge Pipe
6. Screws (x2)

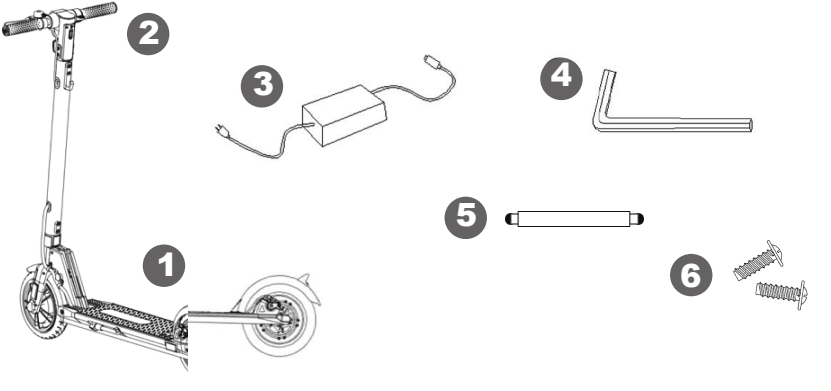

Remove all packaging material, then inspect each item for any accidental damage that may have occurred during shipping.

Get to know your scooter

The electric scooter comes partially assembled.

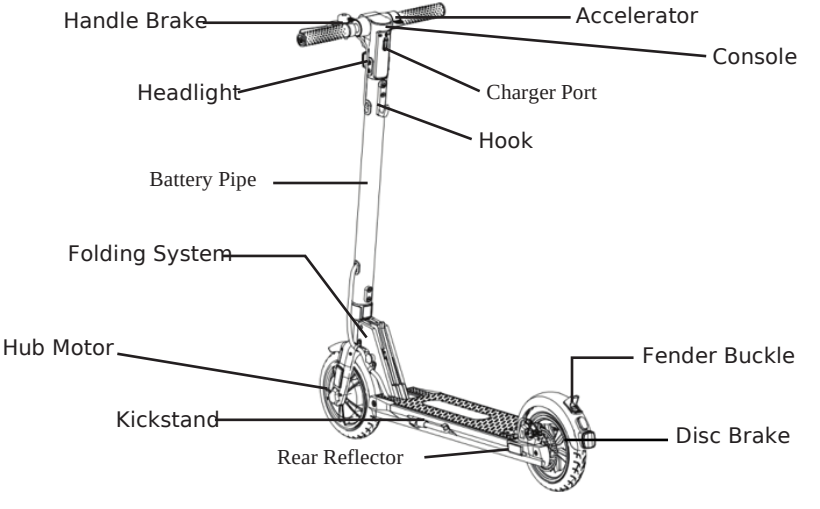

Specifications

Top Speed:	15.5mph
Distance per Charge:	18 Miles
Weight Range Up To:	220lbs
Battery Type:	36V 7.8AH
Battery Charger:	DC 42V 2.0A
Charge Time:	4 hours
Motor Power:	300W
Power Requirements:	AC 100-240V~50/60HZ

Assemble Your Scooter

TOOLS YOU'LL NEED: 4 mm Allen Key Wrench (included).

1

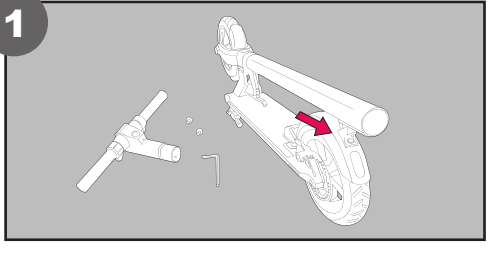

Press down on the rear fender, separate the folding hook and fender buckle, then lift the tiller upright (as shown in the figure). Once the scooter is locked in the upright position, verify by gently trying to fold.

2

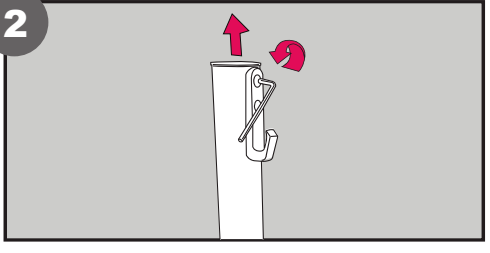

Use an Allen wrench to loosen the screws located at the hook and detach. Once you've removed the hook and screws, make sure to remove the cover from the top of the tiller.

3

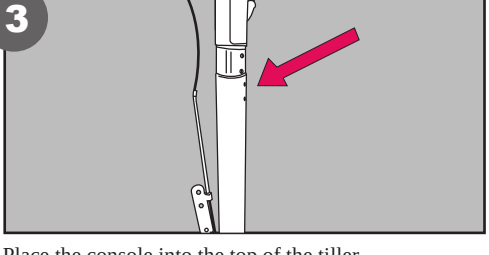

Place the console into the top of the tiller.

4

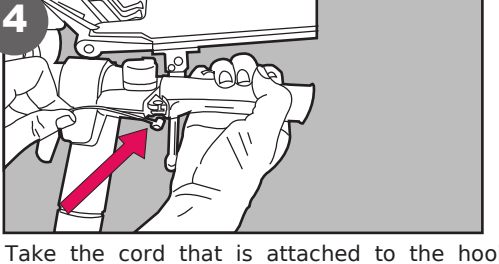

Take the cord that is attached to the hook and bring it to the front of the tiller. Pull the handbrake towards you and insert the round metal piece into the opening. String the small silver cord through the solid piece of the handbrake. Make sure the metal piece on the red cord is pushed fully into the handbrake.

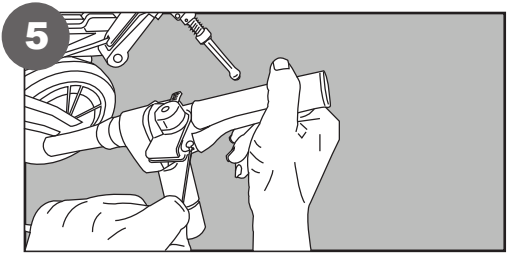

Grab the red cord and hook and bring it back behind the tiller and reattach the hook to the back of the tiller using the screws and an Allen wrench.
(The red cord should go around the tiller.)

Charge Your Scooter

Before using the scooter, you must fully charge the battery.

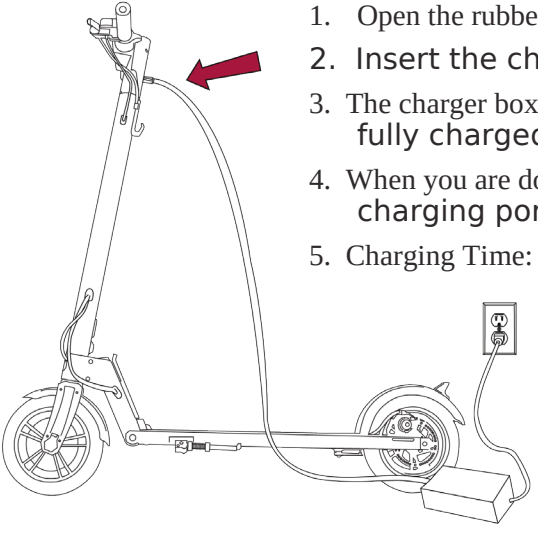

1. Open the rubber charging port cover.
2. Insert the charging plug into the port.
3. The charger box will have a green light when fully charged and a red light when charging.
4. When you are done charging be sure cover the charging port to keep it clear of dust and debris.
5. Charging Time: 4 hours

Charging Requirement: Make sure to charge your scooter in conditions that do not exceed 104 degrees Fahrenheit or below 32 degrees Fahrenheit.

Scooter Console Functions

- **To power the scooter on,** press and hold the red button for 1 second.
- **To power the scooter off,** press and hold the red button for 5 seconds.
- **To power the headlight on or off,** press the red button for 1 second while the scooter is powered on.
- The console on the Scooter displays speed in MPH, Battery life, and what gear the scooter is currently in.

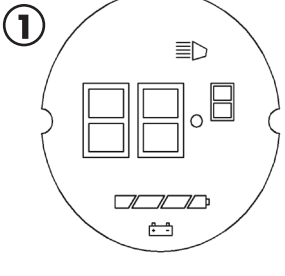

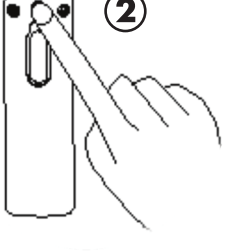

Riding Tips

1. You will want to start riding your electric scooter with one foot on the platform and one foot on the ground. Use your foot on the ground to push off and at the same time, press the throttle button to begin movement.
2. Press the handbrake to slow down or stop.
3. The scooters perform best when on a smooth surface e.g. carparks, smooth roads, footpaths, & bike lanes.
4. Always clean your scooter (wheels, platform..etc.), it's a machine and it needs to be maintained.
5. Do not press the throttle while walking with the scooter beside you.
6. Be aware of the terrain you are riding on, watch out for curbs and obstacles!
7. Cruise Control: To activate the cruise control press the right-hand throttle down for 10 seconds. To deactivate the cruise control press either the right-hand throttle or brake button to deactivate the cruise control.

Putting Your Scooter Away/Folding

Before folding the scooter, make sure that the scooter is powered off.

Folding: Ensure the electric scooter is powered off, hold the tiller and pull out the spring pin on the right folding panel then rotate the spring pin counterclockwise. Insert the hook on the tiller into the loop on the rear fender buckle. You may hear a click which indicates that you were successful in folding and locking the scooter.

Unfolding: Press the rear fender and pull the tiller up to unfold the electric scooter, the spring pin will insert itself in place within the folding lever to lock the folding mechanism.

1

2

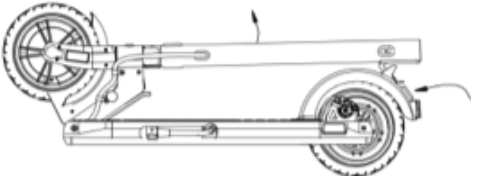

Maintenance & Repair

If you regularly clean and maintain your electric scooter, it will extend its life.

Cleaning and storage: If the scooter is dirty, wipe it clean with a soft damp cloth.

Brake Adjustments & Service: If you notice you need brake adjustments or any service on your scooter, contact our customer service team and we will adjust and repair your scooter. Do not repair your scooter yourself, this can void your warranty and you risk damaging the scooter.

Tires: If you notice that the tire pressure is low, please fill to the recommended PSI on the side of the tire. **Recommended PSI: 50**

DO NOT use alcohol, gasoline, kerosene, or other corrosive chemical solvents to clean the scooter. It can severely damage the appearance and structure of the scooter. Please do not use a pressure washer as it may also cause damage to the electronics.

Storage: When you're not using your scooter store in a dry and cool location. Avoid storing your scooter outdoors because sun exposure can damage it's appearance and may cause wear on the life of the battery and tires.

Tightening the Tiller: If you notice that the tiller is loose or wiggles while riding, you can tighten the screws. Open the plastic cover, and use the Allen wrench to tighten the screws as shown in the figure below.

Adjusting the Disc Brake: If the disc brake is too tight, use the 4MM Allen wrench to loosen the screws counterclockwise. Pull the brake wire to extend the brake wire and retighten the screws. If the disc brake is too loose, loosen the screws and pull the brake wire to extend the brake wire and retighten the screws.

Battery Information

Only use the approved GOTRAX power adapter to charge your scooter, others may cause risk of fire & equipment may be damaged.

Improper disposal of used batteries may seriously pollute the environment. Please comply with local disposal regulations.

Make sure to store your scooter and power adapter in conditions that do not exceed 122 degrees Fahrenheit or below -4 degrees Fahrenheit.

Warning - Risk of Fire - No User Serviceable Parts, The prolonged exposure to UV Rays, Rain and the Elements may damage the enclosed materials, store indoors when not in use.

Troubleshooting

We frequently update our user manuals at **GOTRAX.com** and reserve the rights to update and change manuals online.

Please contact our customer service team if you are experiencing problems or need more detailed information. They can be reached at GOTRAX.com

Warranty

For warranty information, please visit **GOTRAX.com**.

GOTRAX

WWW. GOTRAX. COM

#RideGOTRAX

GOLABS, INC

GOTRAX.com
2201 Luna Rd.
Carrollton, TX 75006